HeatPure 65L

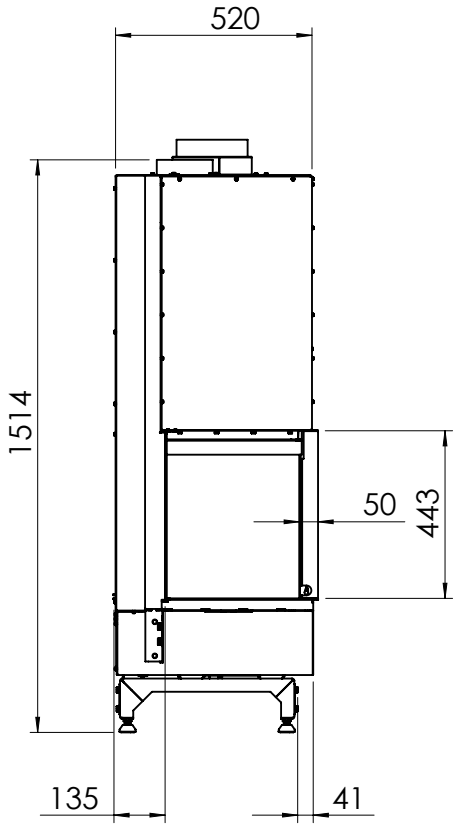

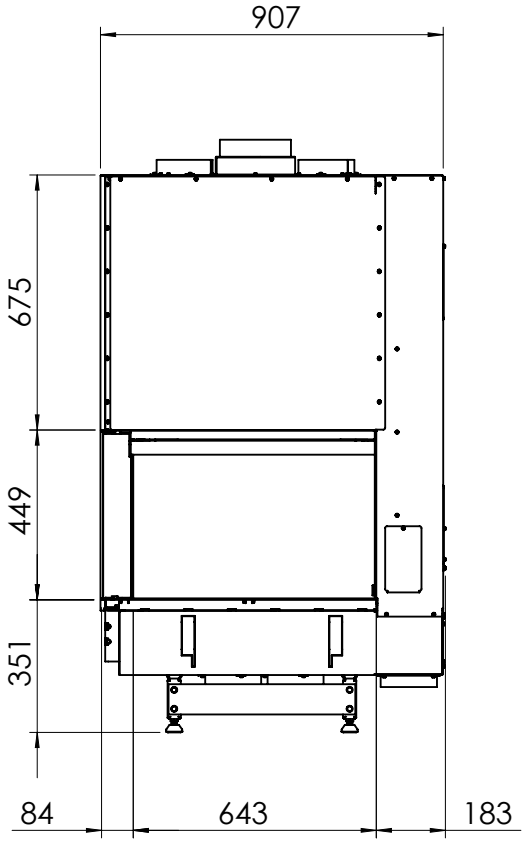

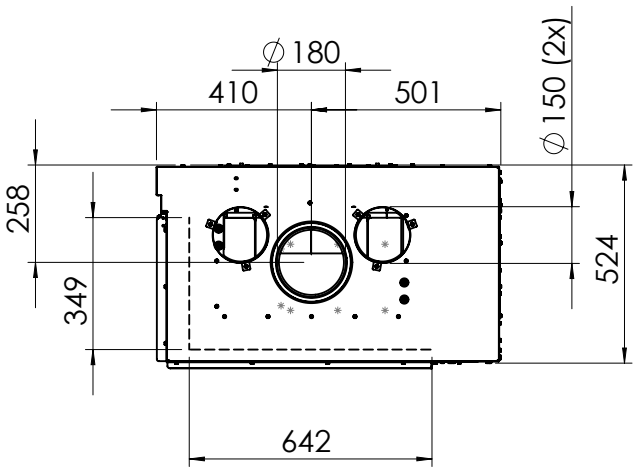

All dimensions in mm. Modifications under reserve. 1-11-2013 sheet 1 / 5

© All rights reserved. This drawing is sole property of Kal-fire. No part of this drawing may be reproduced, or published, in any form or in any way without prior written permission from Kal-fire.

HeatPure 65L

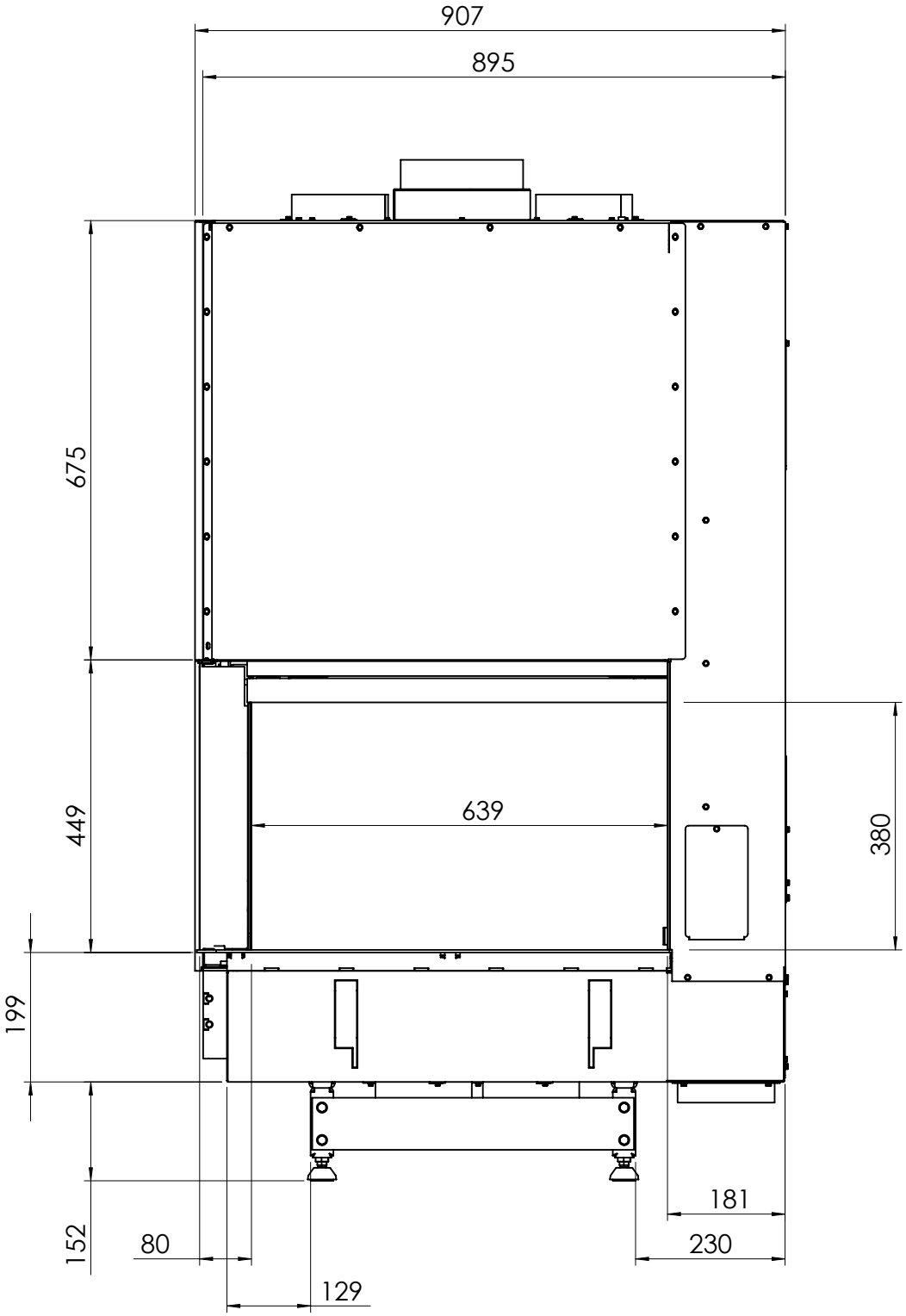

All dimensions in mm. Modifications under reserve.

1-11-2013 sheet 2 / 5

© All rights reserved. This drawing is sole property of Kal-fire. No part of this drawing may be reproduced, or published, in any form or in any way without prior written permission from Kal-fire.

kal-fire

HeatPure 65L

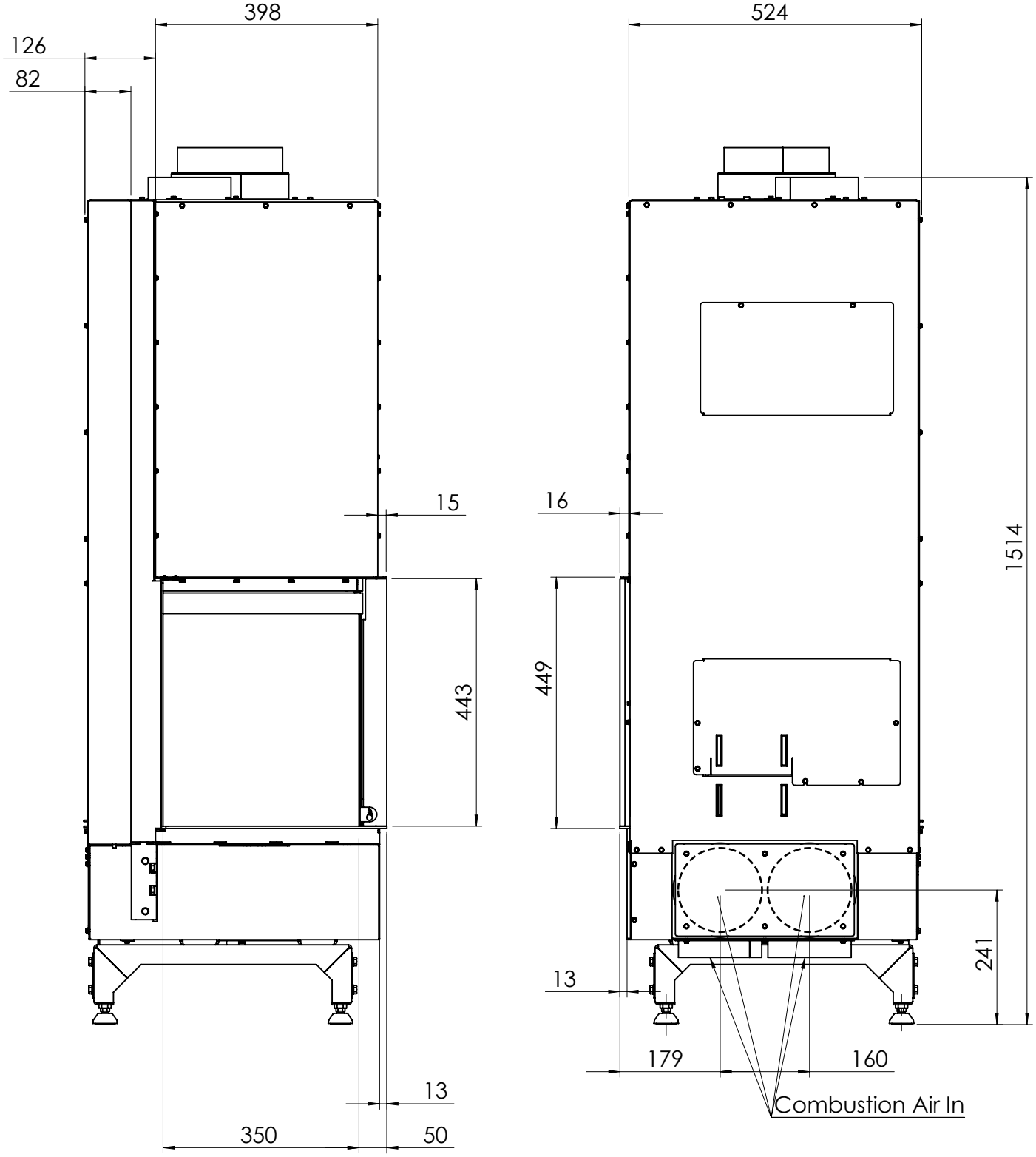

All dimensions in mm. Modifications under reserve.

1-11-2013 sheet 3 / 5

© All rights reserved. This drawing is sole property of Kal-fire. No part of this drawing may be reproduced, or published, in any form or in any way without prior written permission from Kal-fire.

HeatPure 65L

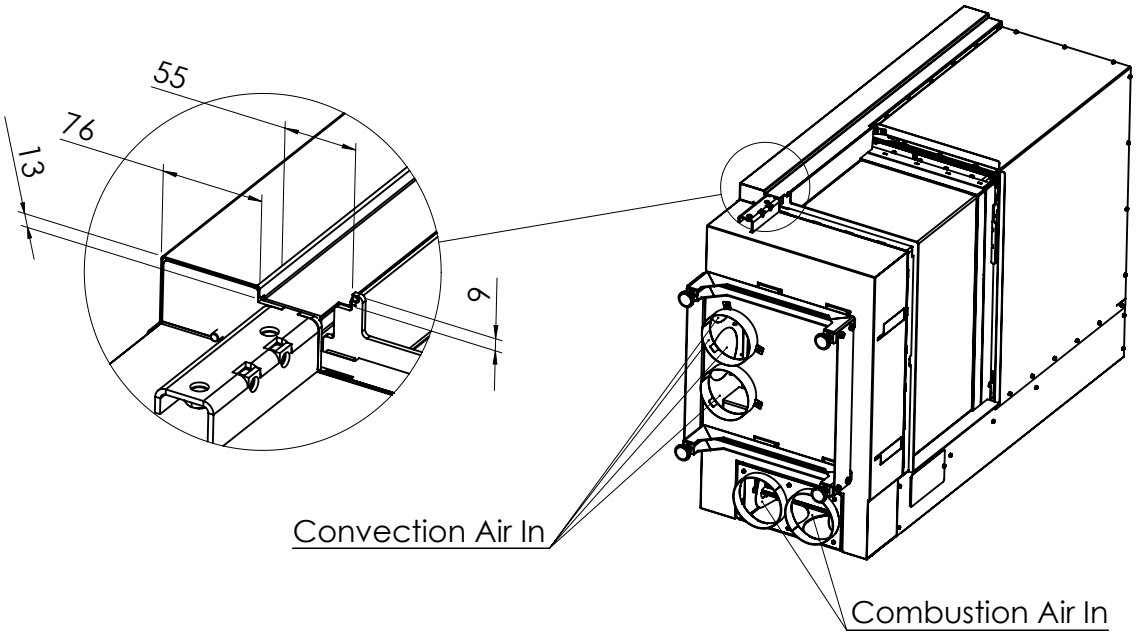

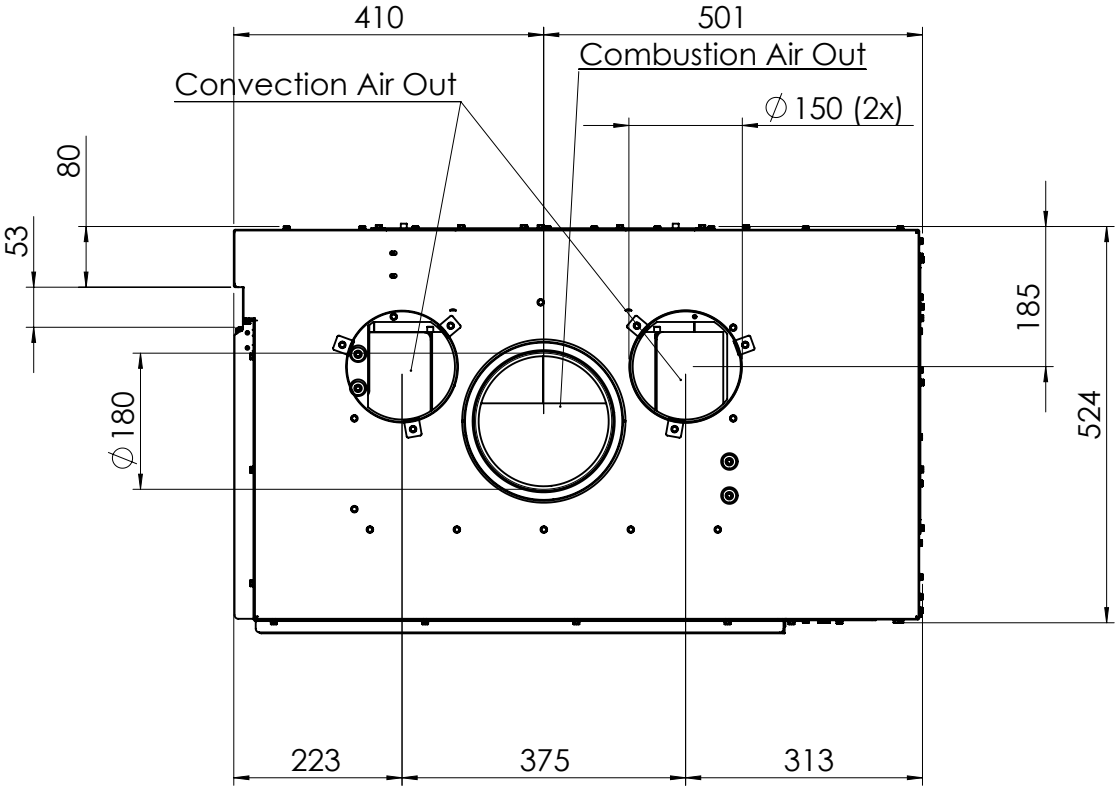

All dimensions in mm. Modifications under reserve.

1-11-2013 sheet 4 / 5

© All rights reserved. This drawing is sole property of Kal-fire. No part of this drawing may be reproduced, or published, in any form or in any way without prior written permission from Kal-fire.

HeatPure 65L

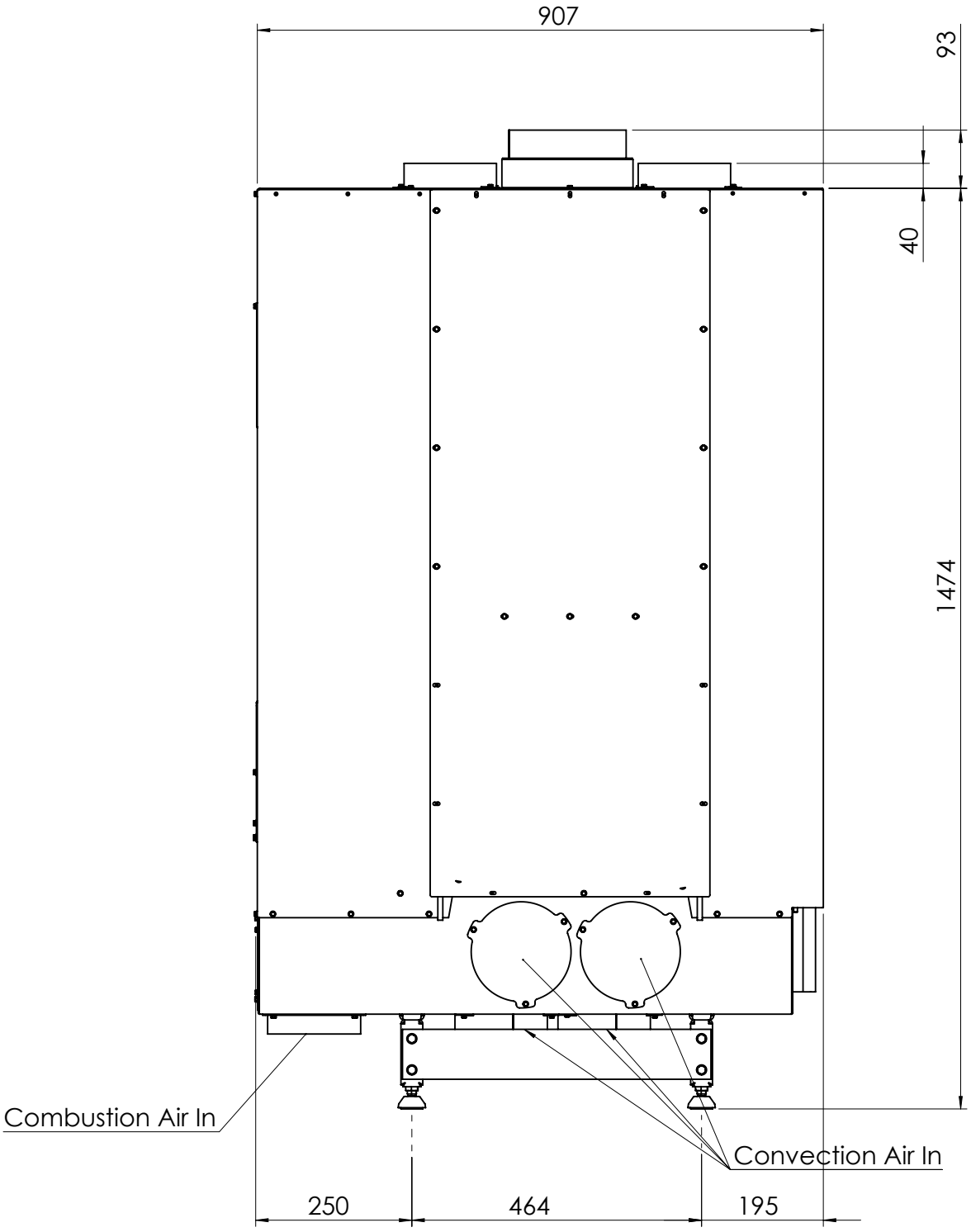

All dimensions in mm. Modifications under reserve.

1-11-2013 sheet 5 / 5

© All rights reserved. This drawing is sole property of Kal-fire. No part of this drawing may be reproduced, or published, in any form or in any way without prior written permission from Kal-fire.